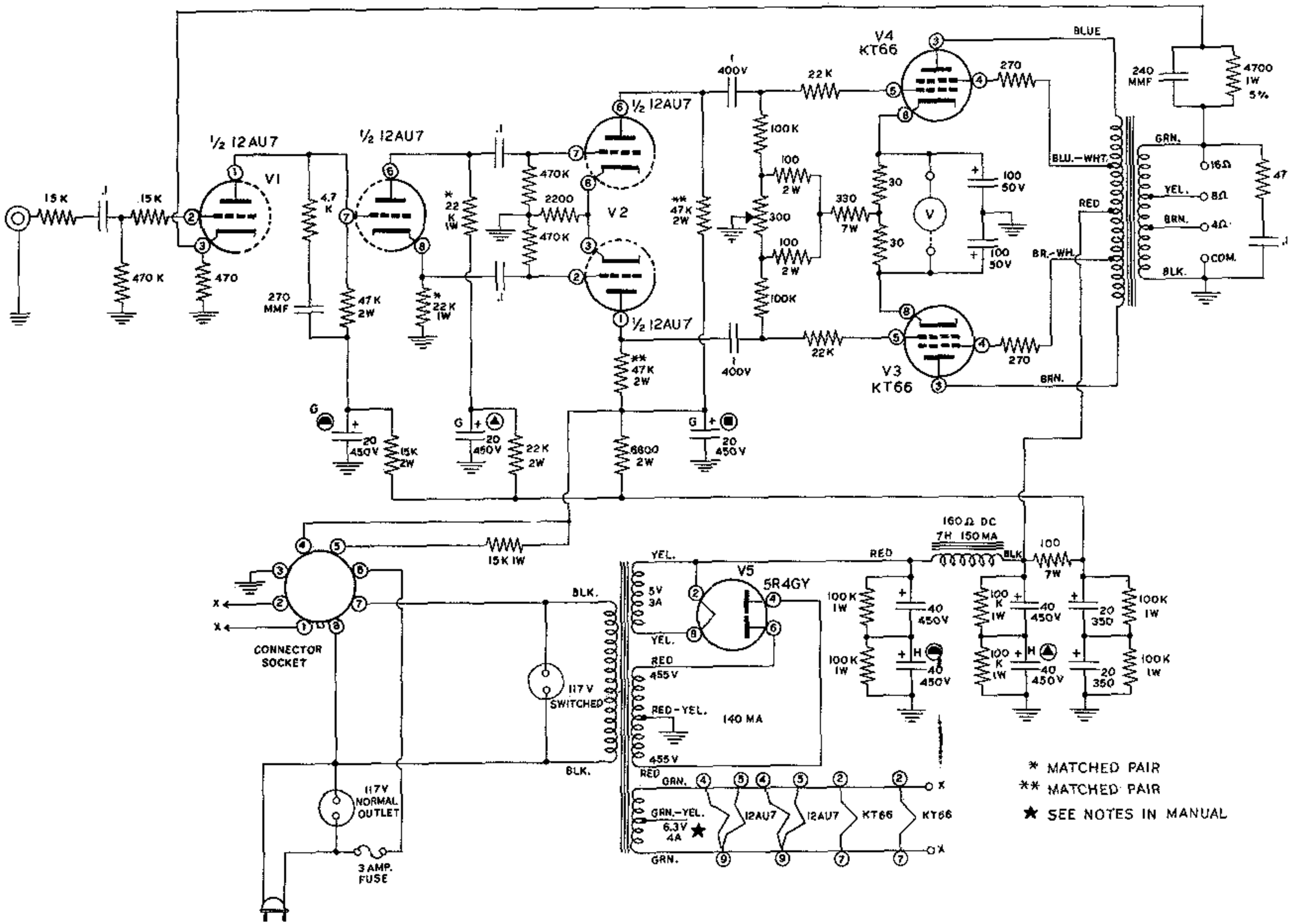
½ 12AU7
V1
½ 12AU7
½ 12AU7
V2
½ 12AU7
V4
KT66
V3
KT66
V5
5R4GY
15 K
15 K
470 K
470
4.7 K
270 MMF
47 K 2W
* 22 K 1W
* 22 K 1W
470K
2200
470K
.1
400V
22 K
100K
100 2W
300
100 2W
100K
** 47K 2W
** 47K 2W
330 7W
30
30
270
100 50V
100 50V
BLUE
BLU.-WHT.
RED
BR.-WH.
BRN.
240 MMF
4700 1W 5%
GRN.
16Ω
YEL.
8Ω
BRN.
4Ω
COM.
BLK.
47
20 450V
15K 2W
20 450V
22 K 2W
6800 2W
20 450V
15 K 1W
CONNECTOR SOCKET
X
X
BLK.
117 V SWITCHED
117V NORMAL OUTLET
3 AMP. FUSE
YEL.
5V 3A
YEL.
RED 455V
RED-YEL.
140 MA
455V
RED
GRN.
GRN.-YEL.
6.3V 4A ★
GRN.
12AU7
12AU7
KT66
KT66
X
X
160Ω DC 7H 150 MA
RED
BLK
100 7W
100K 1W
40 450V
100K 1W
40 450V
100 K 1W
40 450V
100 K 1W
40 450V
20 350
20 350
100K 1W
100K 1W
* MATCHED PAIR
** MATCHED PAIR
★ SEE NOTES IN MANUAL